RESKIT™ RESIN PARTS FOR SCALE PLASTIC KITS

GBU-54 (LJDAM) BOMBS

(4 PCS) A-10C, F-15E, F-16C/D, F-22A, F-35A, B-1B, B-2A, B-52H, MQ-9

INSTRUCTION **RS48-0365**

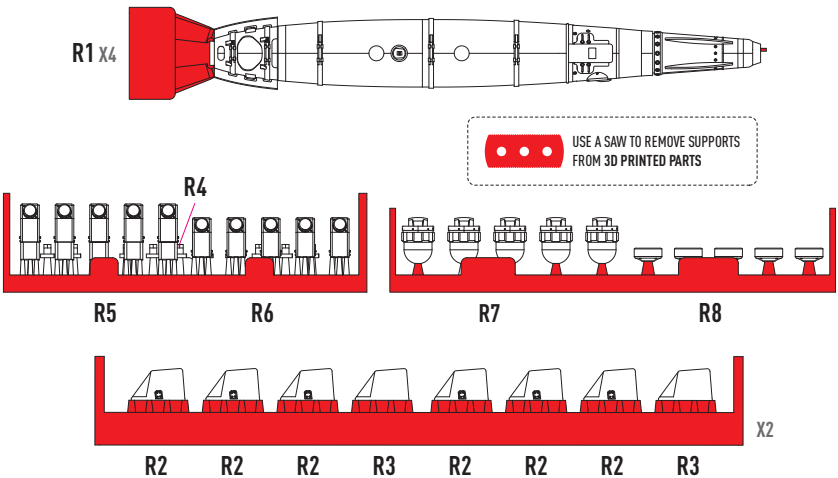

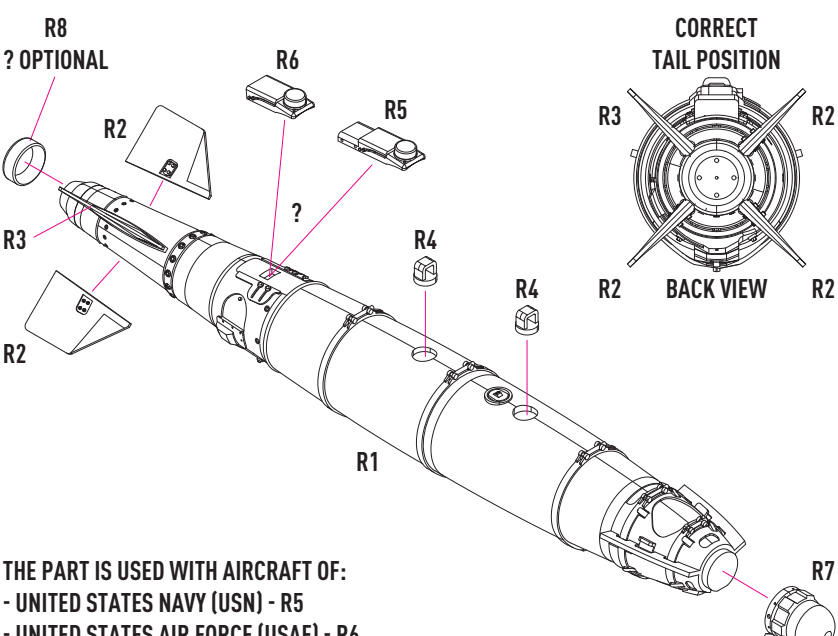

THE PART IS USED WITH AIRCRAFT OF:
- UNITED STATES NAVY (USN) - R5
- UNITED STATES AIR FORCE (USAF) - R6

RESKIT™ RESIN PARTS FOR SCALE PLASTIC KITS

GBU-54 (LJDAM) BOMBS

(4 PCS) A-10C, F-15E, F-16C/D, F-22A, F-35A, B-1B, B-2A, B-52H, MQ-9

DECAL INSTRUCTION RS48-0365

COLORS	GUNZE / AQEOUS	GUNZE / MR.COLOR	FEDERAL STANDARD
OLIVE DRAB	H304	C304	FS 34087
YELLOW	H4	C4	FS 33538
FLAT BLACK	H12	C33	

COLORS	GUNZE / AQEOUS	GUNZE / MR.COLOR	FEDERAL STANDARD
GRAY	H308	C308	FS 36375
STEEL	H18	C28	
SILVER	H8	C8	

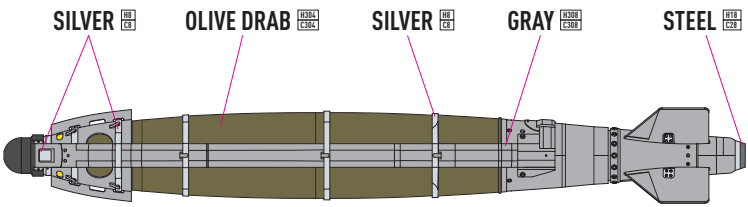

BOTTOM

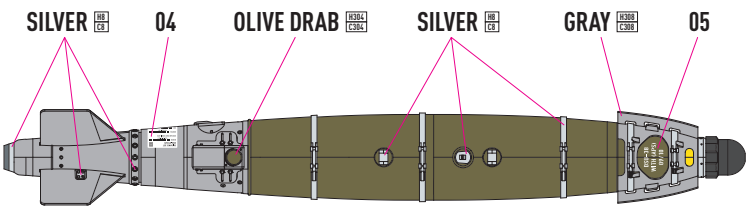

TOP

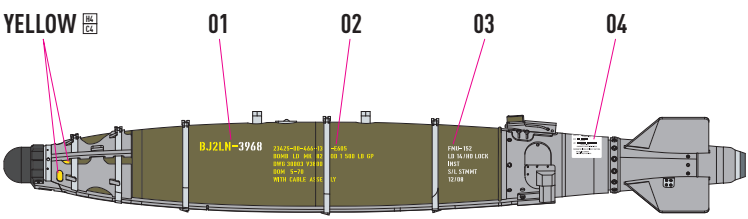

LEFT

GBU-38 FUZING OPTIONS

DSU-38A/B PLGS WITH ADJUSTABLE PROXIMITY SENSOR (APS)	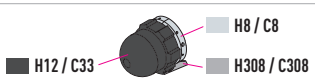	R7
AJ SAASM GPS ANTENNA (OPTIONAL)		R8

general Issues: info@reskit.com.ua / claim resolution: claims@reskit.com.ua

RESKIT-MODELS.COM

fb.com/reskit.official instagram.com/reskit_official pinterest.com/reskit_official