RESKIT™ RESIN PARTS FOR SCALE PLASTIC KITS

AGM-88 "HARM" WITH LAU-118A

(2 PCS) FOR F/A-18, F-4, F-16, EA-6, F-111

INSTRUCTION RS48-0390

CUT

REMOVE PROTECTIVE COVER

USE A SAW TO REMOVE SUPPORTS FROM 3D PRINTED PARTS

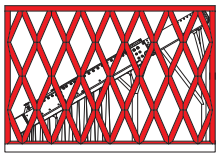

R8 X2

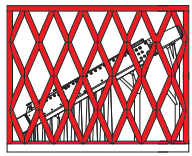

R9 X2

R2 X2

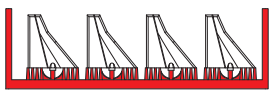

R5 X2

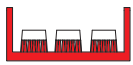

R4

R7 R6

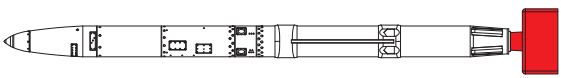

R1 X2

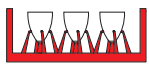

R3

1

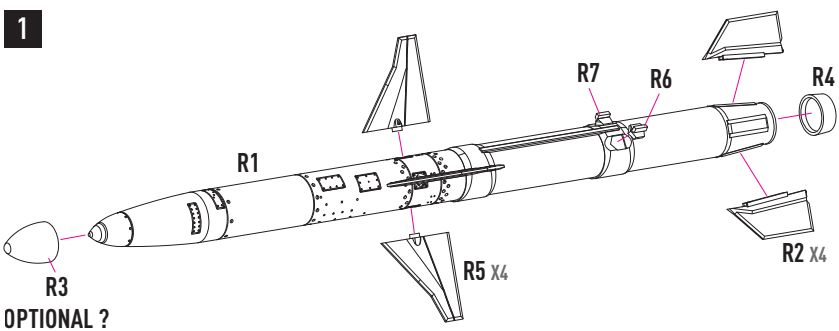

2

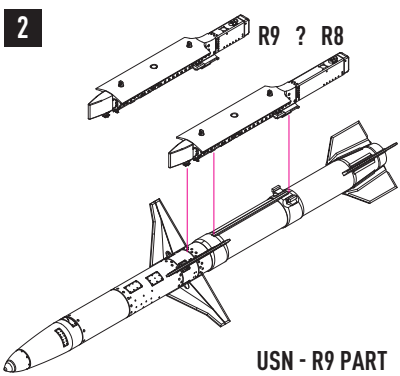

STEP 1

USN - R9 PART
USAF - R8 PART

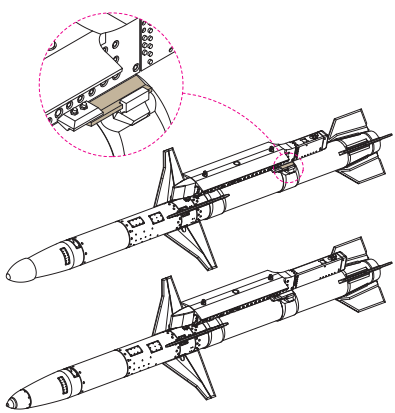

RESIN PARTS
FOR SCALE PLASTIC KITS

AGM-88 "HARM" WITH LAU-118A

(2 PCS) FOR F/A-18, F-4, F-16, EA-6, F-111

DECAL INSTRUCTION **RS48-0390**

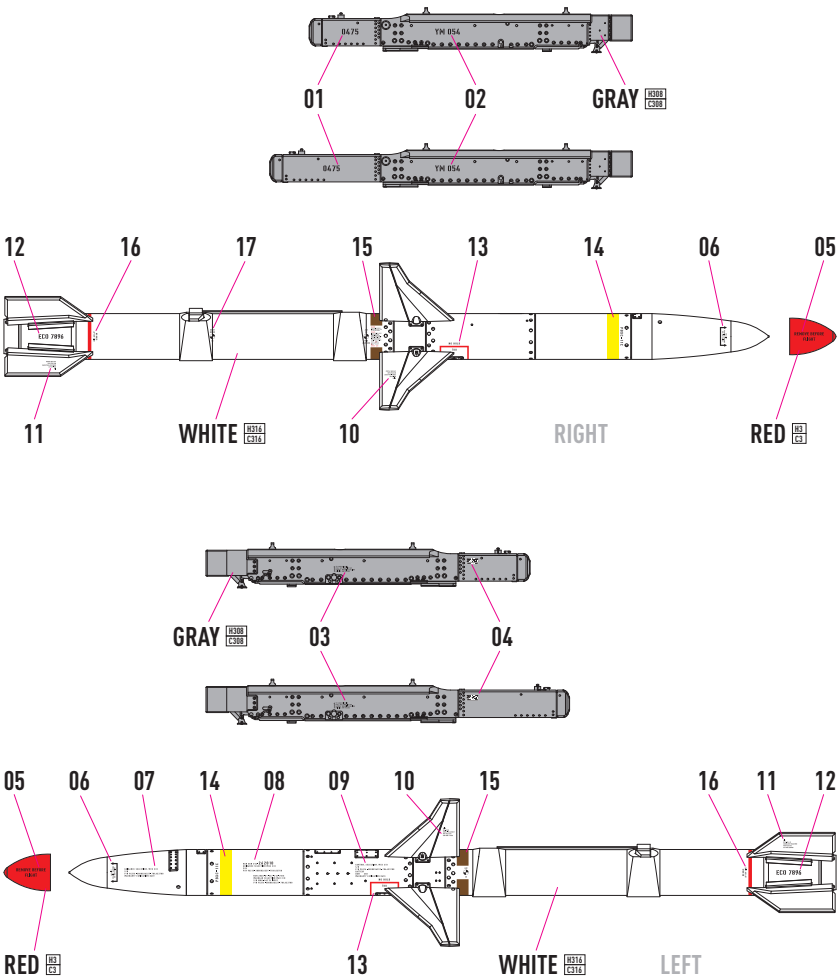

	COLORS	GUNZE / AQEOUS	GUNZE / MR.COLOR	FEDERAL STANDARD
	WHITE	H316	C316	FS 17875
	GRAY	H308	C308	FS 36375
	RED	H3	C3	

general Issues: info@reskit.com.ua / claim resolution: claims@reskit.com.ua

RESKIT-MODELS.COM

fb.com/reskit.official instagram.com/reskit_official pinterest.com/reskit_official