RESKIT™ RESIN PARTS FOR SCALE PLASTIC KITS

BAE HAWK T.1 EXHAUST NOZZLE
WITH AIR BRAKES FOR HOBBYBOSS KIT

INSTRUCTION **RSU48-0275**

CUT

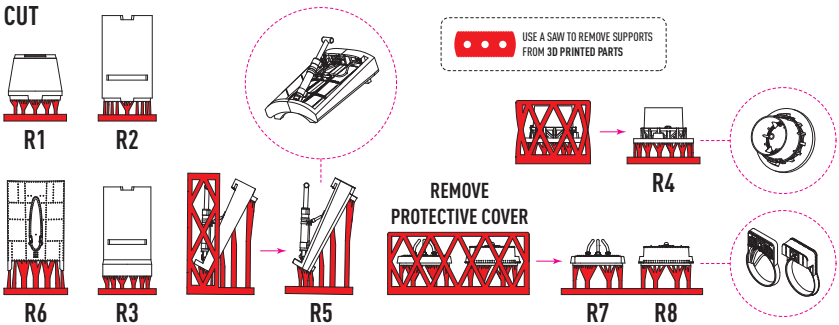

REMOVE PARTS H41, H3, H53, H45, A4, A5 FROM HOBBYBOSS KIT

1

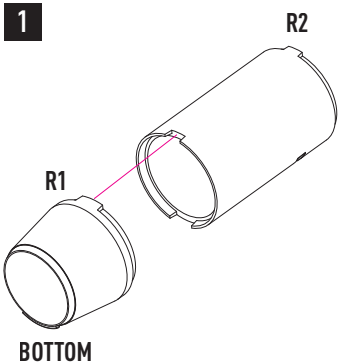

2

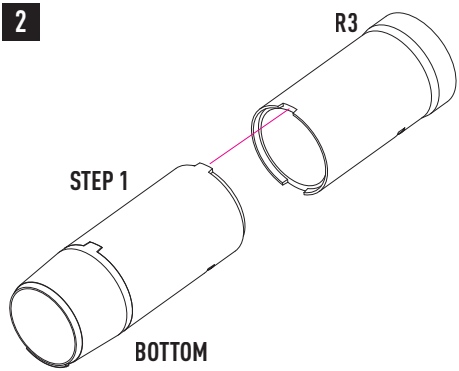

3

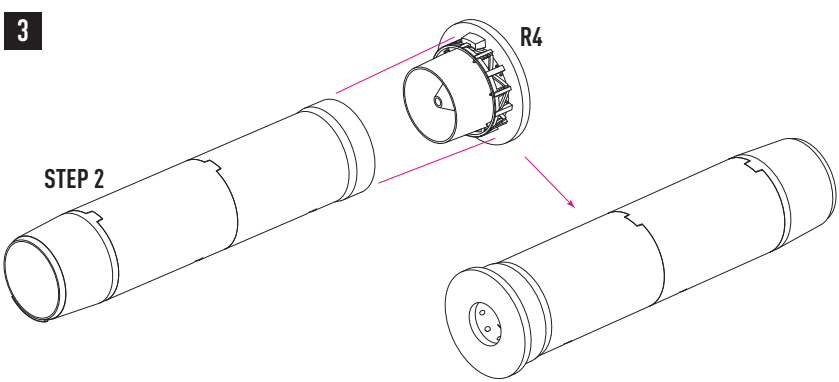

RESIN PARTS
FOR SCALE PLASTIC KITS

BAE HAWK T.1 EXHAUST NOZZLE
WITH AIR BRAKES FOR HOBBYBOSS KIT

INSTRUCTION RSU48-0275

4

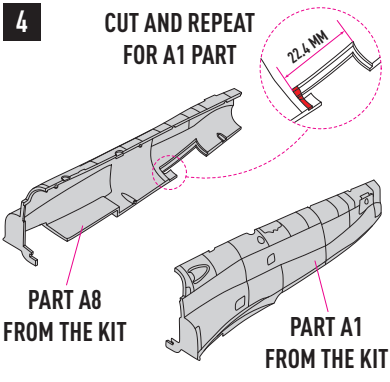

5

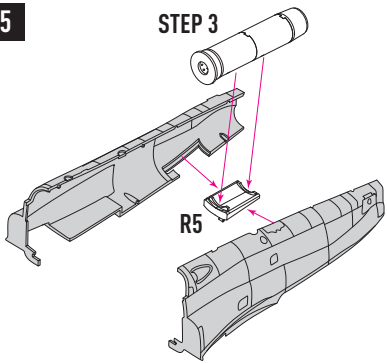

6

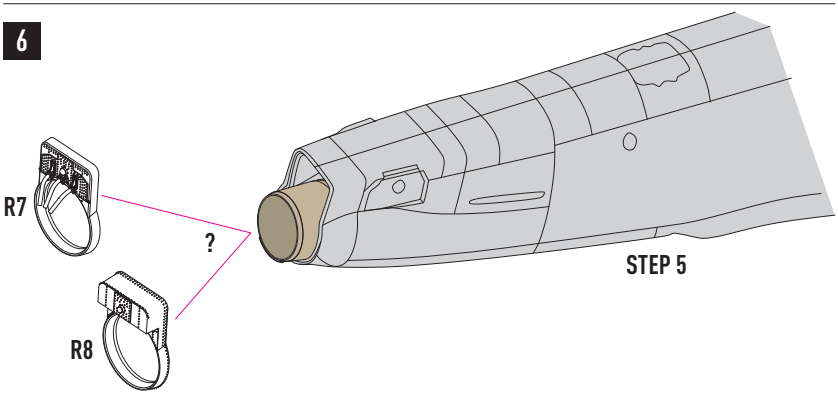
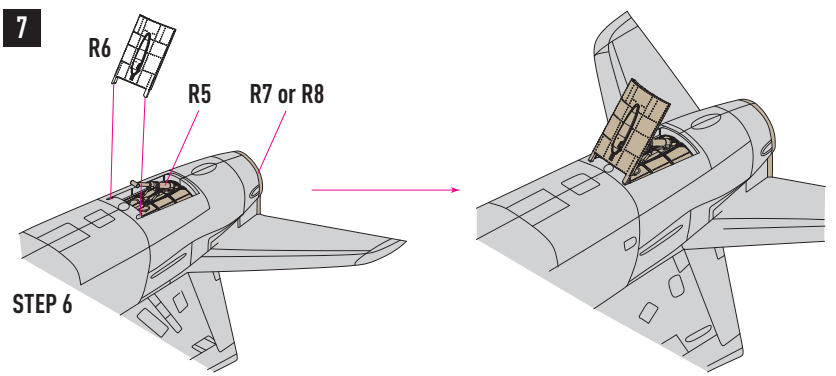
7