RESKIT™ RESIN PARTS FOR SCALE PLASTIC KITS

230 GALLON CENTERLINE FUEL TANK
FOR OV-10 (A, B, C) (USAF AND OTHER AF)

INSTRUCTION **RSU48-0359**

DETAILS AFTER REMOVAL FROM SUPPORTS

USE A SAW TO REMOVE SUPPORTS FROM **3D PRINTED PARTS**

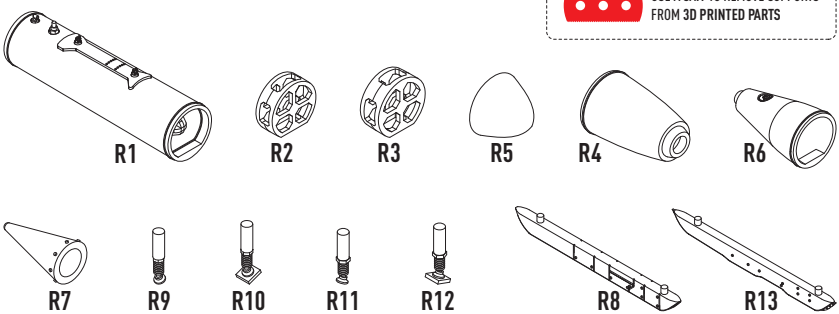

1

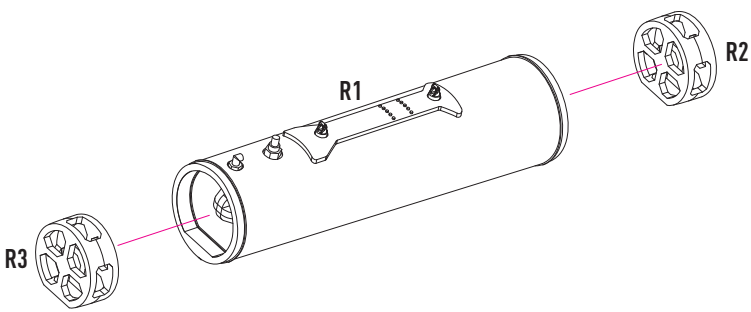

2

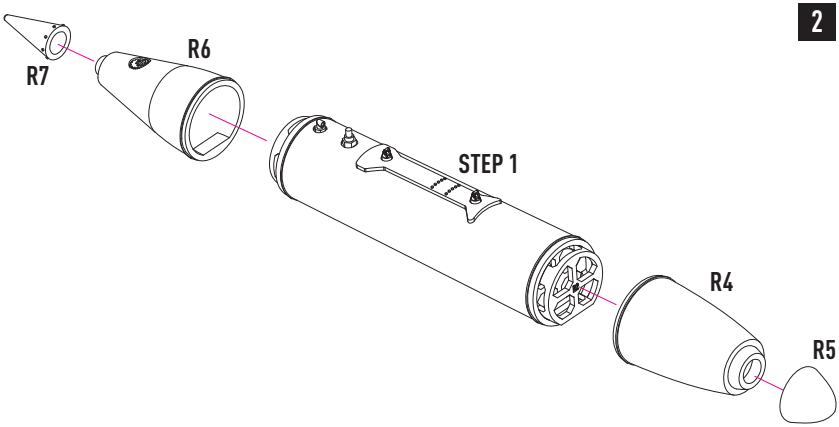

RESKIT RESIN PARTS FOR SCALE PLASTIC KITS

230 GALLON CENTERLINE FUEL TANK

FOR OV-10 (A, B, C) (USAF AND OTHER AF)

DECAL INSTRUCTION RSU48-0359

3

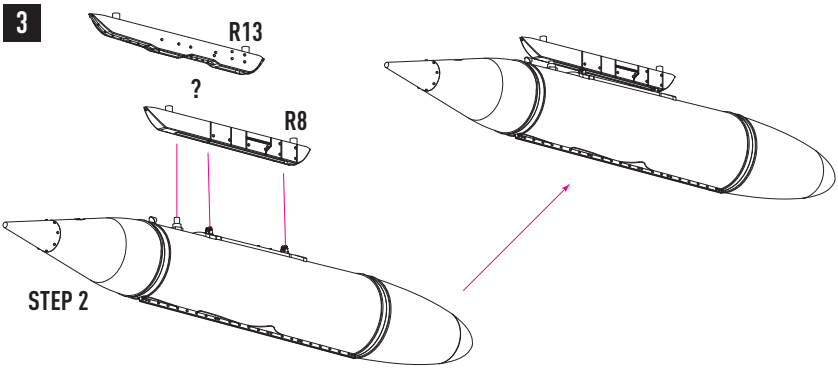

4 DRILL A HOLES D=1 MM

FILL

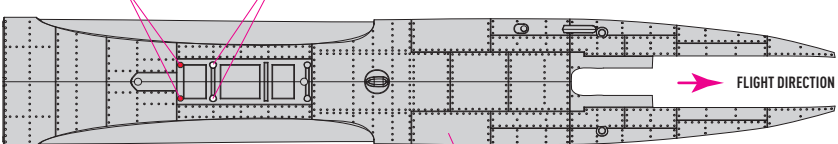

PART A12 FROM THE KIT
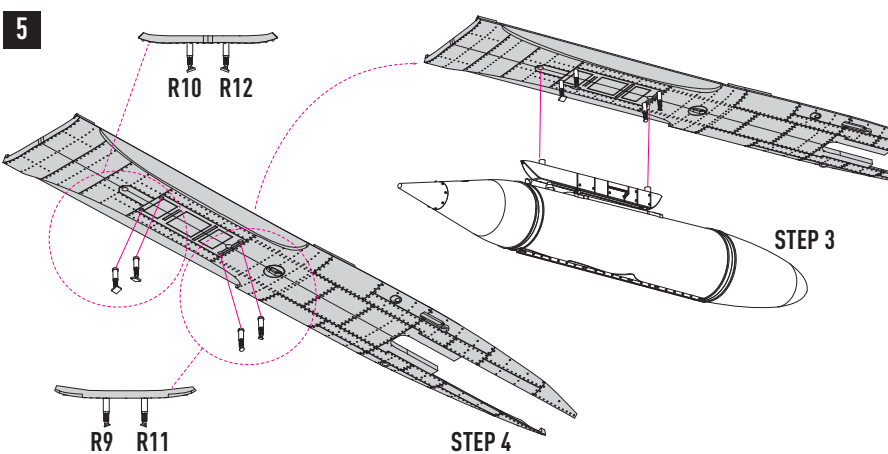
5